HOJA TÉCNICA

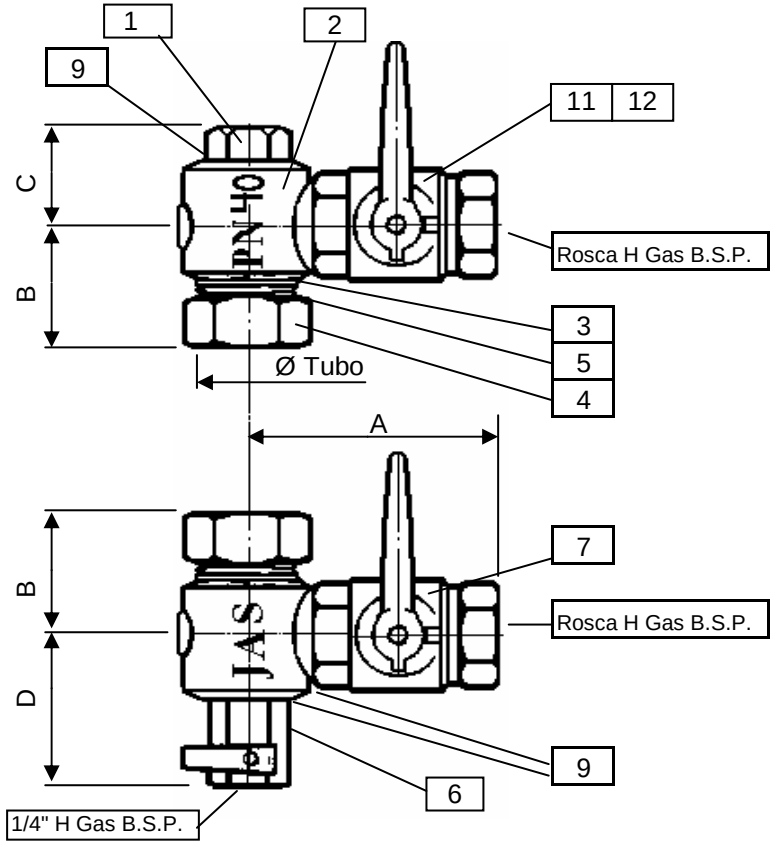


| ROSCA | TUBO | A | B | C | D | E | PRESION | | PESO |
|---|---|---|---|---|---|---|---|---|---|
| HEMBRA GAS B.S.P. | | | | | | | PN | Prueba | |
| 1/2" | Ø 16 mm | 82 | 46 | 26 | 71 | | 40 | 100 | |
| 1/2" | Ø 20 mm | 82 | 46 | 26 | 71 | | 40 | 100 | |
| 3/4" | Ø 16 mm | 90 | 46 | 26 | 71 | | 40 | 100 | |
| 3/4" | Ø 20 mm | 90 | 46 | 26 | 71 | | 40 | 100 | |
| | | | | | | | | | |
| | | | | | | | | | |
| | | | | | | | | | |
| | | | | | | | | | |

| N.P | C | DENOMINACION | MATERIAL | NP | C | DENOMINACION | MATERIAL |
|---|---|---|---|---|---|---|---|
| 1 | 1 | TAPON SUPERIOR | INOX Aisi-303 | | | | |
| 2 | 2 | CODO | ACERO CARBONO | | | | |
| 3 | 2 | ANILLOS CIERRE | GRAFITO | | | | |
| 4 | 2 | TUERCA PRENSA | INOX Aisi-304 | | | | |
| 5 | 2 | ANILLOS PRENSA | INOX Aisi-304 | | | | |
| 6 | 1 | VALV. PURGA | INOX Aisi-316 | | | | |
| 7 | 2 | VALV. BOLA | INOX Aisi-316 | | | | |
| 8 | | | | | | | |
| 9 | 6 | ESTOPADA | Cintaflón | | | | |
| 10 | | | | | | | |
| 11 | 2 | CIERRE | P.T.F.E. | | | | |
| 12 | 2 | CIERRE BOLA | INOX Aisi 316 | | | | |
| 13 | | | | | | | |
| 14 | | | | | | | |
| 15 | | | | | | | |
| 16 | | | | | | | |
| 17 | | | | | | | |
| 18 | | | | | | | |
| 19 | | | | | | | |
| 20 | | | | | | | |
| 21 | | | | | | | |
| 22 | | | | | | | |
| 23 | | | | | | | |
| 24 | | | | | | | |
| 25 | | | | | | | |
| 26 | | | | | | | |
| 27 | | | | | | | |

| | FECHA | NOMBRE | | | | |
|---|---|---|---|---|---|---|
| | | | | NIQUELADO | | PULIDO |
| PROYECTO | 20/01/2001 | Juan Solano | ACABADO | PINTADO | | |
| DIBUJO | 04/05/2001 | Juan Solano | | NATURAL | X | |
| REVISION | 03/03/2002 | Juan Solano | **ACERO CARBONO** | | Nº PLANO | |
| | Juego Grifos Ind. Niv. "JAS" MIXTO | | | | **42000000030** | |